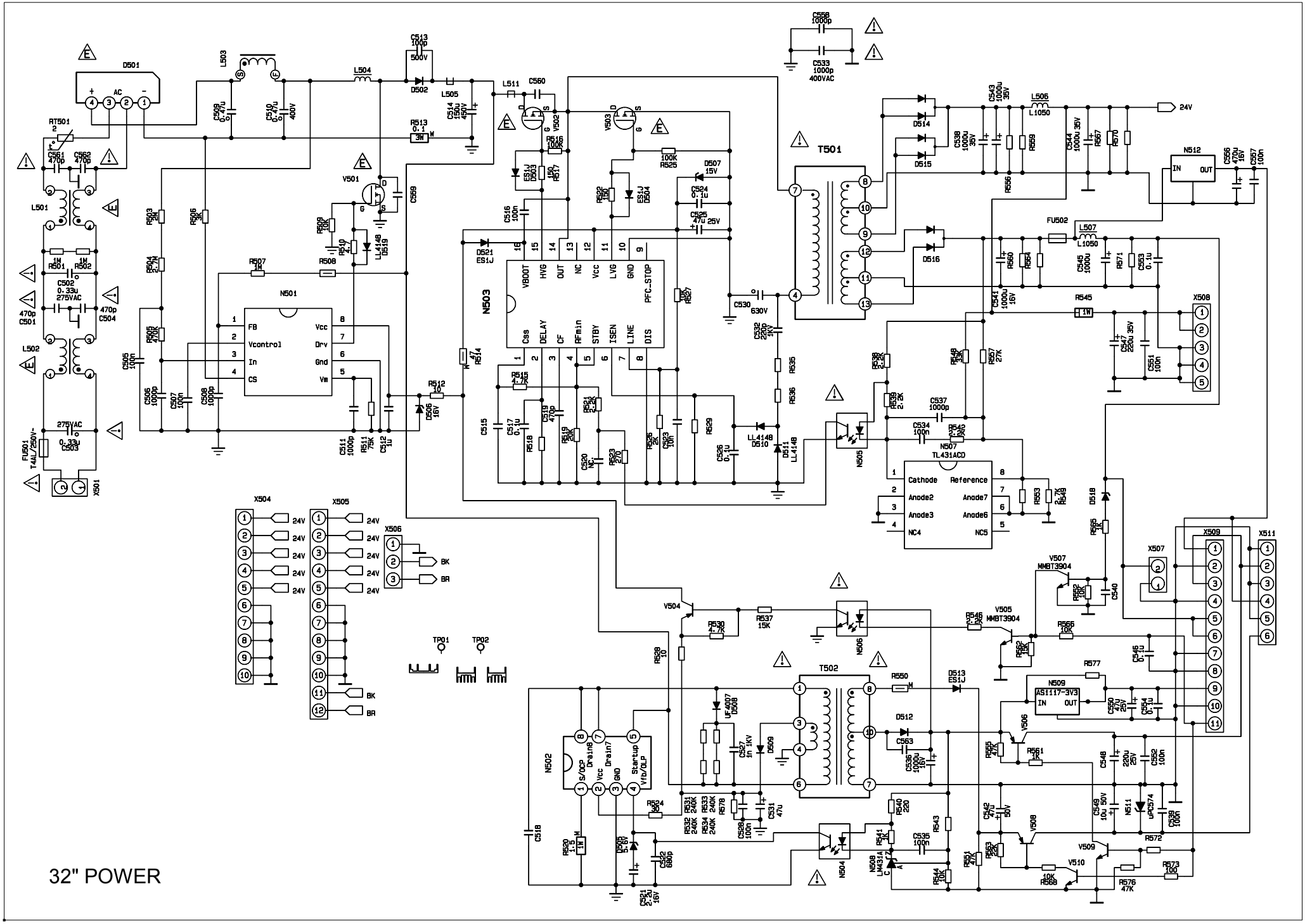
D501
AC
RT501
L501
L502
L503
L504
L505
L506
L507
L511
L1050
C501
C502
C503
C504
C505
C506
C507
C508
C509
C510
C511
C512
C513
C514
C515
C516
C517
C518
C519
C520
C521
C522
C523
C524
C525
C526
C527
C528
C529
C530
C531
C532
C533
C534
C535
C536
C537
C538
C539
C540
C541
C542
C543
C544
C545
C546
C547
C548
C549
C550
C551
C552
C553
C554
C555
C556
C557
C558
C559
C560
C561
C562
R501
R502
R503
R504
R505
R506
R507
R508
R509
R510
R511
R512
R513
R514
R515
R516
R517
R518
R519
R520
R521
R522
R523
R524
R525
R526
R527
R528
R529
R530
R531
R532
R533
R534
R535
R536
R537
R538
R539
R540
R541
R542
R543
R544
R545
R546
R547
R548
R549
R550
R551
R552
R553
R554
R555
R556
R557
R558
R559
R560
R561
R562
R563
R564
R565
R566
R567
R568
R569
R570
R571
R572
R573
R574
R575
R576
R577
V501
V502
V503
V504
V505
V506
V507
V508
V509
V510
D502
D503
D504
D505
D506
D507
D508
D509
D510
D511
D512
D513
D514
D515
D516
D517
D518
D519
D520
D521
N501
N502
N503
N504
N505
N506
N507
N508
N509
N512
T501
T502
FU501
FU502
X501
X502
X504
X505
X506
X507
X508
X509
X511
TP01
TP02
FB
Vcontrol
In
CS
Vcc
Drv
Gnd
Vm
VBOOT
HVG
OUT
NC
Vcc
LVG
GND
PFC_STOP
Css
DELAY
CF
RFmin
STBY
ISEN
LINE
DIS
S/OCP
Drain8
Vcc
Drain7
GND
Startup
Vfb/OLP
Cathode
Reference
Anode2
Anode7
Anode3
Anode6
NC4
NC5
TL431ACD
AS1117-3V3
IN
OUT
24V
BK
BR
275VAC
0.33u
470p
T4AL/250V~
275VAC
630V
400VAC
1000p
500V
470u
0.47u
400V
0.1
3W
100K
150
10K
47
LL4148
ES1J
UF4007
UF574
MMBT3904
LM431A
1N
1W
M
NC

32" POWER